FORWARD CONVERTER

DESIGN AND IMPLEMENTATION

COURSE PROJECT REPORT
HNEET409
ANALYSIS OF POWER CONVERTERS

Submitted by

Amal Joy
Reg No: LTCR24EE142

to

the APJ Abdul Kalam Technological University in partial fulfillment
of the requirements for the award of the degree of

Bachelor of Technology in
Electrical and Electronics Engineering

Department of Electrical and Electronics Engineering

Government Engineering College, Thrissur

MARCH 2026

DEPARTMENT OF ELECTRICAL ENGINEERING

GOVERNMENT ENGINEERING COLLEGE, THRISSUR

CERTIFICATE

This is to certify that the report entitled **"Forward Converter Design and Implementation"** submitted by **Amal Joy (LTCR24EE142)** to the APJ Abdul Kalam Technological University in partial fulfillment of the requirements for the award of the degree of **Bachelor of Technology in Electrical and Electronics Engineering** is a bonafide record of the project work carried out under my guidance and supervision.

This report has not been submitted to any other University or Institute for any purpose.

Project Guide
Dr. Nakula Narayanan
Assistant Professor
Dept. of Electrical and
Electronics Engineering
GEC Thrissur

ACKNOWLEDGEMENT

I would like to express my sincere gratitude to the Department of Electrical and Electronics Engineering, Government Engineering College, Thrissur, for providing me the opportunity to undertake this project as part of the course **HNEET409 – Analysis of Power Converters**.

I extend my heartfelt thanks to **Dr. Nakula Narayanan**, Assistant Professor, for his valuable guidance, constant encouragement, and technical support throughout the project.

I also thank all faculty members, my friends, and my family for their support and encouragement.

.

1 Abstract

This report presents the design, simulation, and hardware implementation of a forward converter. The converter is designed to step up an input voltage of 10 V to an output voltage of 15 V with a load resistance of 10 Ω. The design includes transformer design using an EE42/21/15 ferrite core, output filter design, and control using the TL494 PWM controller.

The converter operates at a switching frequency of 10 kHz. A reset winding is employed in the transformer to ensure proper demagnetization of the core, eliminating the need for a snubber circuit. The transformer and output inductor are designed based on practical constraints such as core area, current density, and window utilization.

The complete circuit is simulated using LTspice, and the performance is verified under steady-state conditions. The practical implementation is carried out on a dot board, and key waveforms such as switching frequency, duty cycle, and transformer voltages are verified using a Digital Storage Oscilloscope (DSO).

The experimental results show an output voltage close to the expected value, with minor deviations due to practical non-idealities such as winding resistance, leakage inductance, and component losses. The converter operates at a duty cycle of approximately 38

A comparison between simulation (with practical component values) and hardware results shows good agreement, validating the design approach. The project demonstrates the practical realization of a forward converter and highlights the impact of non-idealities in real-world power electronic systems.

Contents

1 Abstract **1**

2 Specifications **4**

3 Design Calculations **4**
3.1 Output Parameters 4
3.2 Duty Cycle 4
3.3 Output Inductor Design 4
3.4 Output Capacitor Design 4
3.5 Magnetizing Current 5

4 Transformer Design **5**
4.1 Core Selection 5
4.2 Given Specifications 5
4.3 Design Calculations 5
4.3.1 1. Primary Turns 5
4.3.2 2. Secondary Turns 6
4.3.3 3. Reset Winding 6
4.3.4 4. Flux Density Check 6
4.3.5 5. Current and Wire Selection 6
4.3.6 Wire Selection 7
4.3.7 6. Window Utilization Check 7
4.4 Final Design Summary 8
4.5 Design Remarks 8
4.6 Practical Implementation and Observations 8

5 Output Inductor Design **8**
5.1 Given Specifications 9
5.2 Design Calculations 9
5.2.1 Number of Turns 9
5.2.2 Air-gap Length 9
5.2.3 Window Fill Factor 10
5.2.4 Current Density 10
5.2.5 Fringing Condition 10
5.2.6 Reluctance Condition 10
5.3 Final Design Summary 10
5.4 Practical Implementation and Observations 10

6 Component Selection with Justification **11**
6.1 Switch (MOSFET) 11
6.2 Diode 11
6.3 Output Capacitor 11
6.4 Output Inductor 11
6.5 Transformer Core 11
6.6 Winding Strategy 11
6.7 Controller 11
6.8 Load Resistor 12

7 Control Circuit **12**
7.1 schematic of TL494 circuit 12

8 LTspice Simulation **12**
8.1 Circuit Diagram 12
8.2 Output Voltage 13
8.3 Output Ripple 13
8.4 Inductor Current 13
8.5 inductor Ripple 13
8.6 temperature across mosfet 14

9 Hardware Implementation on breadboard **14**
9.1 TL494 circuit testing 14
9.2 DSO Waveforms 15

10 Results and Discussion-simulation based **15**

11 Final Hardware Implementation **15**
11.1 Forward Converter Prototype 15
11.2 Input Power Measurement 16
11.3 Output Voltage Verification 17
11.4 Switching Waveforms 17
11.5 Transformer Voltage Waveforms 18
11.6 LTspice Schematic (Practical Values) 19
11.7 Output Voltage (Practical Simulation) 19
11.8 Efficiency Calculation 19

12 Conclusion **20**

2 Specifications

Input Voltage	10 V
Output Voltage	15 V
Load Resistance	10 Ω
Switching Frequency	10 kHz
Turns Ratio	1:4
Magnetizing Inductance	1 mH
Output Ripple Limit	1%

3 Design Calculations

3.1 Output Parameters

$$I_o = \frac{V_o}{R} = \frac{15}{10} = 1.5\,A \tag{1}$$

$$P_o = V_o \times I_o = 22.5\,W \tag{2}$$

3.2 Duty Cycle

$$V_o = D \cdot n \cdot V_{in} \tag{3}$$

$$15 = D \cdot 4 \cdot 10 \tag{4}$$

$$D = 0.375 \tag{5}$$

3.3 Output Inductor Design

Assuming 20% ripple current:

$$\Delta I_L = 0.3\,A \tag{6}$$

$$L_o = \frac{V_o(1-D)}{\Delta I_L f_s} \tag{7}$$

$$= \frac{15(1-0.375)}{0.3 \times 10^4} \tag{8}$$

$$= 3.125\,mH \tag{9}$$

3.4 Output Capacitor Design

$$C_o = \frac{\Delta I_L}{8 f_s \Delta V_o} \tag{10}$$

$$C_o = \frac{0.3}{8 \times 10^4 \times 0.15} = \frac{0.3}{12000} = 25, \mu\text{F} \tag{11}$$

A capacitor of $470, \mu$F was used in the hardware implementation, as it was readily available. The higher capacitance helps in further reducing the output voltage ripple.

3.5 Magnetizing Current

$$I_m = \frac{V_{in} D}{L_m f_s} \tag{12}$$

$$= \frac{10 \times 0.375}{1 \times 10^{-3} \times 10^4} \tag{13}$$

$$= 0.375\, A \tag{14}$$

4 Transformer Design

The transformer is designed for a forward converter to operate safely up to a maximum duty cycle of 50%, ensuring that the core does not saturate under worst-case conditions. The design satisfies constraints on flux density, current density, and window utilization.

4.1 Core Selection

Core used: EE42/21/15 ferrite core.

4.2 Given Specifications

- Input voltage: $V_{in} = 10\,\mathrm{V}$
- Output voltage: $V_o = 15\,\mathrm{V}$
- Output current: $I_o \approx 1.5\,\mathrm{A}$
- Switching frequency: $f_s = 10\,\mathrm{kHz}$
- Maximum duty cycle: $D_{max} = 0.5$
- Core: EE42/21/15 ferrite core
  - Effective core area: $A_e = 180\,\mathrm{mm}^2 = 180 \times 10^{-6}\,\mathrm{m}^2$
  - Window area: $A_w = 276\,\mathrm{mm}^2$
- Maximum flux density: $B_m = 0.2\,\mathrm{T}$
- Current density: $J = 3.5\,\mathrm{A/mm}^2$
- Window utilization factor: $k_w = 0.2$
- Turns ratio: $N_s/N_p = 4$

4.3 Design Calculations

4.3.1 1. Primary Turns

$$N_p = \frac{V_{in} D_{max}}{B_m A_e f_s} \tag{15}$$

$$N_p = \frac{10 \times 0.5}{0.2 \times 180 \times 10^{-6} \times 10^4} \approx 13.89 \tag{16}$$

$$N_p = 14 \text{ turns}$$

4.3.2 2. Secondary Turns

$$N_s = 4 \times N_p = 56 \text{ turns}$$

4.3.3 3. Reset Winding

$$N_r = N_p = 14 \text{ turns}$$

4.3.4 4. Flux Density Check

$$B = \frac{V_{in} D_{max}}{N_p A_e f_s} \tag{17}$$

$$B = \frac{10 \times 0.5}{14 \times 180 \times 10^{-6} \times 10^4} \approx 0.198\,\text{T} \tag{18}$$

$$B < 0.2\,\text{T} \quad \text{(Safe)}$$

4.3.5 5. Current and Wire Selection

The required conductor cross-sectional area is given by:

$$a_w = \frac{I_{\text{rms}}}{J} \tag{19}$$

Primary Winding

$$I_{p,\text{rms}} = 5.1012\,\text{A} \quad \text{(Primary RMS Current @ 50\% Duty Cycle -from Ltspice simulation)} \tag{20}$$

$$a_{wp} = \frac{5.1012}{3.5} \approx 1.457\,\text{mm}^2 \tag{21}$$

For 22 SWG wire:

$$a_{\text{swg 22}} = 0.396\,\text{mm}^2 (bare\,conductor\,area) \tag{22}$$

$$a_p = 4 \times 0.396 = 1.584\,\text{mm}^2 \tag{23}$$

$$1.584\,\text{mm}^2 > 1.457\,\text{mm}^2 \quad \text{(Satisfies)}$$

$$I_{p,\text{max}} = 4 \times 1.57 = 6.28\,\text{A} \tag{24}$$

$$5.1012\,\text{A} < 6.28\,\text{A} \quad \text{(Safe)}$$

Secondary Winding

$$I_{s,\text{rms}} = 1.23\,\text{A} \quad \text{(Secondary RMS Current @ 50\% Duty Cycle-from Ltspice simulation)} \tag{25}$$

$$a_{ws} = \frac{1.23}{3.5} \approx 0.351\,\text{mm}^2 \tag{26}$$

$$a_s = 0.396\,\text{mm}^2 \tag{27}$$

$$0.396\,\text{mm}^2 > 0.351\,\text{mm}^2 \quad \text{(Satisfies)}$$

$$1.23\,\text{A} < 1.57\,\text{A} \quad \text{(Safe)}$$

Reset Winding

$$a_{\text{swg 25}} = 0.203\,\text{mm}^2 (bare\,conductor\,area) \tag{28}$$

$$a_{\text{swg 25}} = a_r \tag{29}$$

$$I_{r,\text{rms}} = 0.1176\,\text{A} \quad \text{(Reset Winding RMS Current @ 50\% Duty Cycle-from Ltspice simulation)} \tag{30}$$

$$a_{wr} = \frac{0.1176}{3.5} \approx 0.0336\,\text{mm}^2 \tag{31}$$

$$a_r = 0.203\,\text{mm}^2 \tag{32}$$

$$0.203\,\text{mm}^2 \gg 0.0336\,\text{mm}^2 \quad \text{(Safe)}$$

$$0.1176\,\text{A} < 0.8\,\text{A} \quad \text{(Safe)}$$

4.3.6 Wire Selection

- Primary: 4 × 22 SWG (litz equivalent)
- Secondary: 22 SWG
- Reset: 25 SWG (bifilar)

4.3.7 6. Window Utilization Check

$$A_{cu} = N_p a_p + N_s a_s + N_r a_r \tag{33}$$

$$A_{cu} = (14 \times 1.584) + (56 \times 0.396) + (14 \times 0.203) \tag{34}$$

$$A_{cu} = 22.176 + 22.176 + 2.842 \approx 47.19\,\text{mm}^2 \tag{35}$$

$$A_w k_w = 276 \times 0.2 = 55.2\,\text{mm}^2 \tag{36}$$

$$47.19 < 55.2 \quad \text{(Winding fits)}$$

4.4 Final Design Summary

Parameter	Value
Core	EE42/21/15
Primary turns	14 turns
Secondary turns	56 turns
Reset turns	14 turns
Turns ratio	1:4
Flux density	0.198 T
Primary wire	4×22 SWG
Secondary wire	22 SWG
Reset wire	25 SWG (bifilar)

4.5 Design Remarks

The transformer is designed for a maximum duty cycle of 50% to ensure safe operation under worst-case conditions. The selected number of primary turns limits the flux density below 0.2 T, preventing core saturation.

The conductor sizes are selected based on a current density of $3.5\,\mathrm{A/mm^2}$, and all windings satisfy this criterion. Manufacturer current ratings further confirm safe operation under maximum load.

The transformer is implemented without an air-gap, as it is intended for energy transfer. The reset winding ensures proper demagnetization of the core. The window utilization confirms that the winding arrangement is physically realizable.

4.6 Practical Implementation and Observations

The primary turns were increased to 17 to obtain a primary inductance of 1.01 mH.

For a turns ratio of 1:4, 68 turns were required on the secondary. However, due to window area limitation, only 63 turns could be wound, resulting in a measured secondary inductance of 9.34 mH.

The reset winding was implemented using bifilar winding with the primary, ensuring equal inductance and proper core demagnetization.

Winding	Turns	Measured Inductance
Primary	17	1.01 mH
Secondary	63	9.34 mH
Reset	17	1.01 mH

Table 1: Practical Winding Details

5 Output Inductor Design

The output inductor is designed to meet the required inductance while satisfying constraints on flux density, current density, and window utilization.

5.1 Given Specifications

- Inductance: $L = 3.125\,\text{mH}$
- RMS current: $I_{\text{rms}} = 1.3175\,\text{A}$
- Peak current: $I_m = 1.5\,\text{A}$
- Core: E42/21/15 ferrite core
  - Effective core area: $A_e = 180\,\text{mm}^2$
  - Window area: $A_w = 276\,\text{mm}^2$
- Maximum flux density: $B_m = 0.25\,\text{T}$
- Wire used: 2 strands of 22 SWG (litz equivalent)
  - Single strand area: $0.326\,\text{mm}^2$
  - Effective copper area: $a_w = 0.652\,\text{mm}^2$
- Maximum current density: $J < 3.5\,\text{A/mm}^2$
- Maximum window fill factor: $k_w \leq 0.3$
- Relative permeability: $\mu_r = 2200$
- Permeability of free space: $\mu_0 = 4\pi \times 10^{-7}\,\text{H/m}$

5.2 Design Calculations

5.2.1 Number of Turns

$$N = \frac{LI_m}{B_m A_e} \tag{37}$$

$$N = \frac{3.125 \times 10^{-3} \times 1.5}{0.25 \times 180 \times 10^{-6}} \approx 104.17 \tag{38}$$

$$N = 105 \text{ turns}$$

5.2.2 Air-gap Length

$$l_g = \frac{\mu_0 N^2 A_e}{L} \tag{39}$$

$$l_g = \frac{4\pi \times 10^{-7} \times (105)^2 \times 180 \times 10^{-6}}{3.125 \times 10^{-3}} \approx 0.80\,\text{mm} \tag{40}$$

$$l_g \approx 0.80\,\text{mm}$$

5.2.3 Window Fill Factor

$$k_w = \frac{N a_w}{A_w} \tag{41}$$

$$k_w = \frac{105 \times 0.652}{276} \approx 0.248 \tag{42}$$

$$k_w < 0.3 \quad \text{(Satisfied)}$$

5.2.4 Current Density

$$J = \frac{I_{\text{rms}}}{a_w} \tag{43}$$

$$J = \frac{1.3175}{0.652} \approx 2.02\,\text{A/mm}^2 \tag{44}$$

$$J < 3.5 \quad \text{(Satisfied)}$$

5.2.5 Fringing Condition

$$\sqrt{A_e} = \sqrt{180} \approx 13.4\,\text{mm}$$

$$l_g = 0.80\,\text{mm} \ll 13.4\,\text{mm}$$

5.2.6 Reluctance Condition

$$0.065\,\text{mm} \ll 0.80\,\text{mm}$$

5.3 Final Design Summary

Parameter	Value
Inductance	3.125 mH
Number of turns	105 turns
Air-gap length	0.80 mm
Core	E42/21/15
Wire	2 × 22 SWG
Effective copper area	0.652 mm^2
Fill factor	0.248
Current density	2.02 A/mm^2

5.4 Practical Implementation and Observations

The inductor was practically wound with a total of 107 turns arranged in 5 layers. Due to practical limitations, the air-gap was not set with high precision. As a result, the measured inductance of the output inductor was approximately 4.67 mH, which is higher than the designed value of 3.125 mH.

Since a higher inductance results in reduced output current ripple in the forward converter, the obtained value is acceptable and does not adversely affect the performance. Therefore, the designed inductor was retained without further modification.

6 Component Selection with Justification

6.1 Switch (MOSFET)

Device used: IRF540N

The IRF540N MOSFET is selected due to its high current handling capability and sufficient voltage rating (100 V), making it suitable for low-voltage, high-current applications. It also offers low ON resistance, reducing conduction losses.

6.2 Diode

Device used: MBR20100CT (Schottky diode)

A Schottky diode is chosen due to its low forward voltage drop and fast switching characteristics. This improves efficiency and reduces switching losses in the converter.

6.3 Output Capacitor

Value used: 470 μF

The capacitor value is selected higher than the calculated minimum (375 μF) to ensure that the output voltage ripple remains within 1% under practical conditions.

6.4 Output Inductor

Value designed: 3.125 mH
pratical obtained value:4.37mH

The inductor is designed to limit the ripple current to 20% of the load current, ensuring continuous conduction mode (CCM) and reduced output voltage ripple.

6.5 Transformer Core

Core used: EE42/21/15 ferrite core

The EE42 core is selected for its adequate power handling capability (20–50 W range) and suitability for operation at 10 kHz with low core losses.

6.6 Winding Strategy

- Primary winding uses multiple parallel wires (litz equivalent) to reduce skin effect losses at switching frequency.
- Bifilar winding is used for the reset winding to ensure tight coupling and effective core reset.
- Secondary uses thicker wire to handle higher current.

6.7 Controller

Device used: TL494 PWM controller

The TL494 is selected due to its built-in oscillator, error amplifier, and PWM control features, making it suitable for fixed-frequency switching applications.

6.8 Load Resistor

Value: 10 Ω, 20 W

The resistor is rated higher than the calculated power dissipation (22.5 W peak handling considered) to ensure safe operation and thermal reliability.

7 Control Circuit

PWM controller used: TL494

Switching frequency set to 10 kHz.

7.1 schematic of TL494 circuit

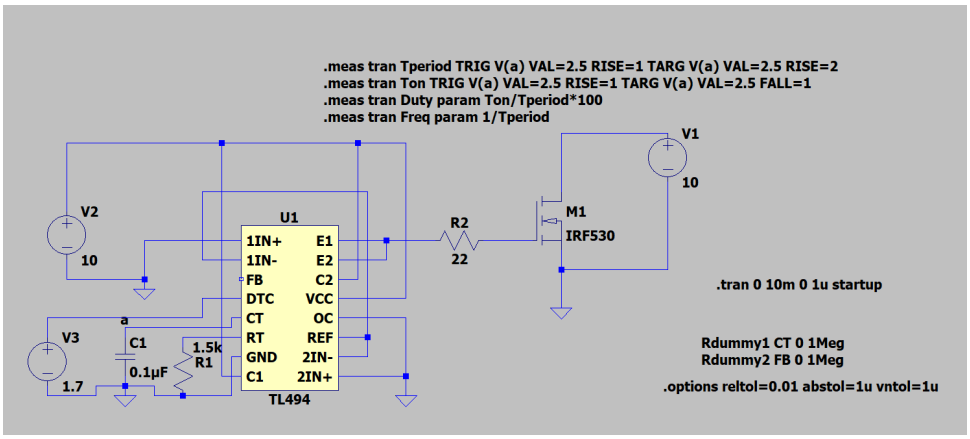

Figure 1: reference circuit for pulse generation

8 LTspice Simulation

8.1 Circuit Diagram

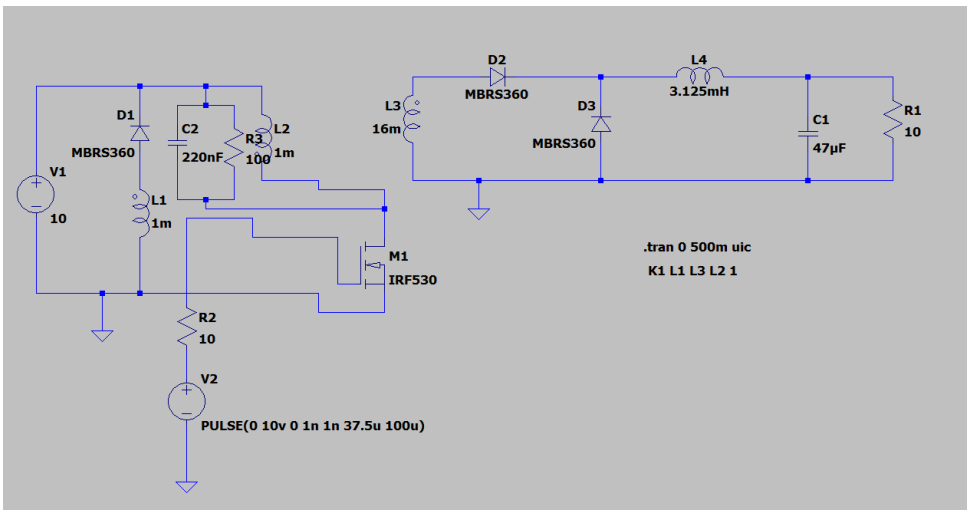

Figure 2: LTspice Schematic

8.2 Output Voltage

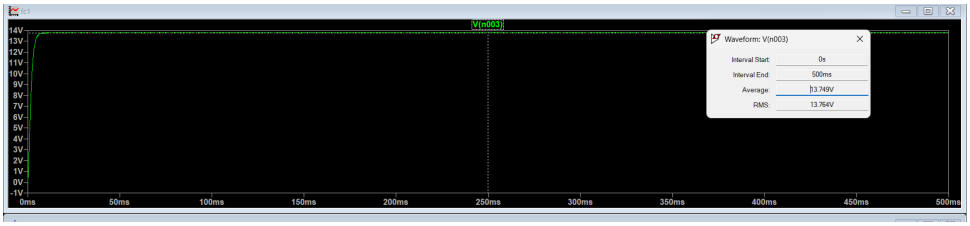

Figure 3: Output Voltage

8.3 Output Ripple

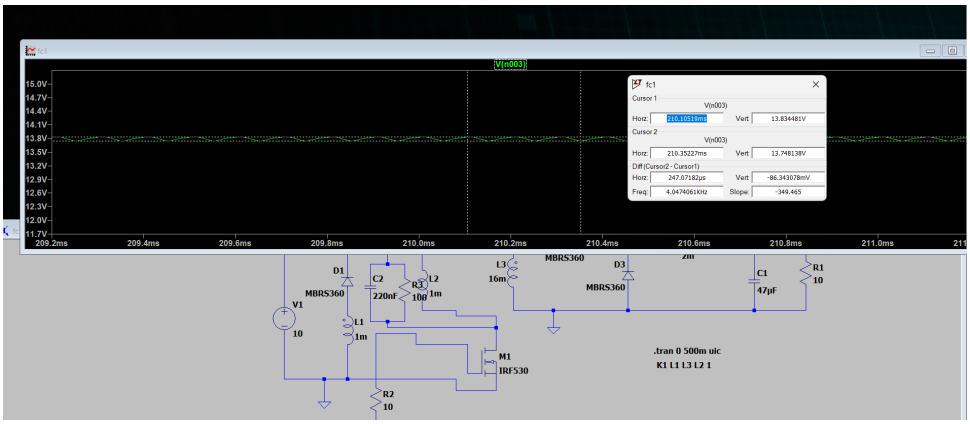

Figure 4: Output Ripple

8.4 Inductor Current

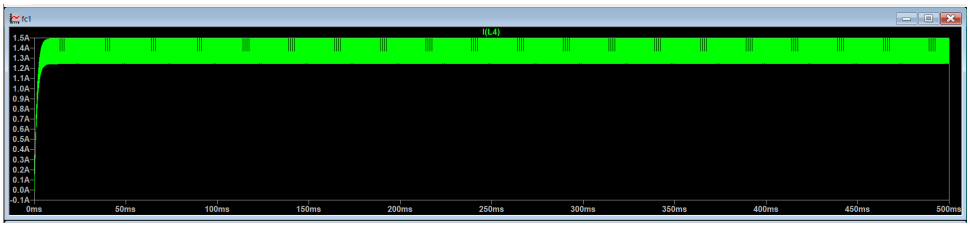

Figure 5: Inductor Current

8.5 inductor Ripple

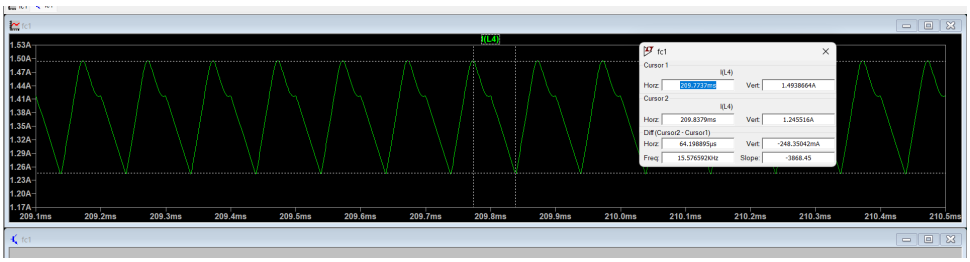

Figure 6: inductor Ripple

8.6 temperature across mosfet

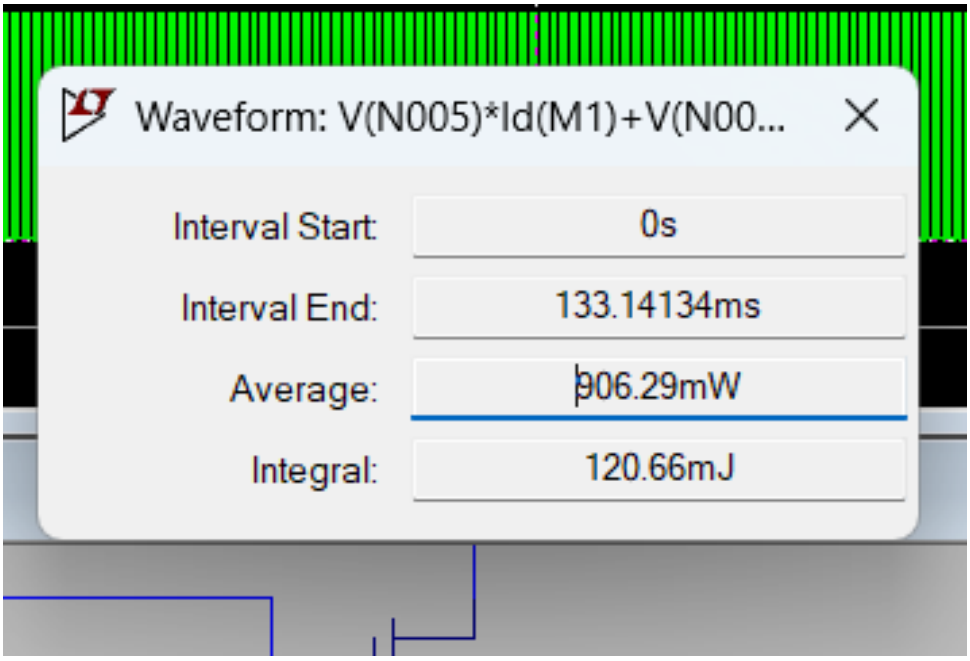

Figure 7: temperature across mosfet
for safety using heatsink on mosfet

9 Hardware Implementation on breadboard

9.1 TL494 circuit testing

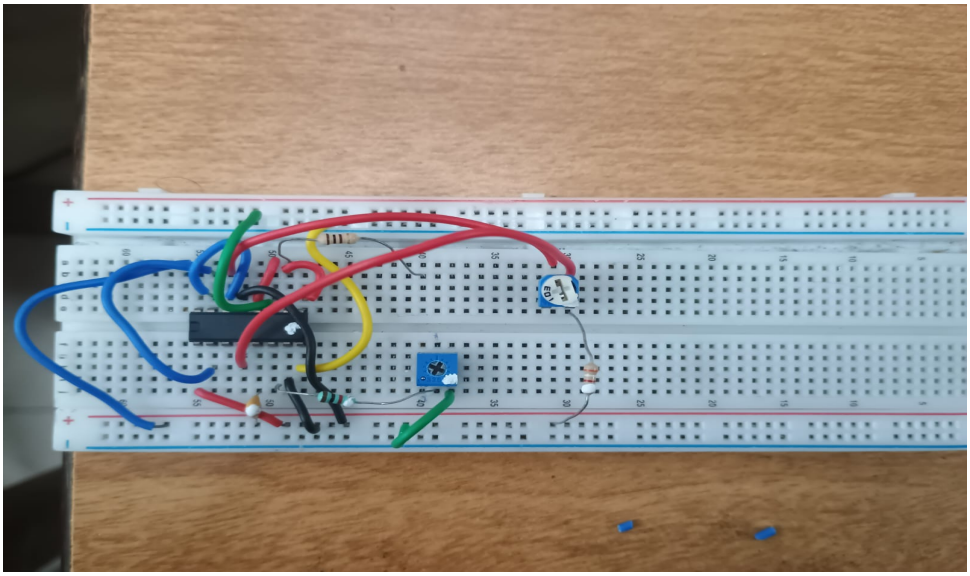

Figure 8: Hardware Setup

9.2 DSO Waveforms

(a) Waveform 1

(b) Waveform 2

Figure 9: Experimental Waveforms

10 Results and Discussion-simulation based

- Output voltage obtained is approximately 15 V.
- Ripple is within the 1% design limit.
- Transformer reset is successful using reset winding.
- Minor deviations due to non-ideal components and leakage inductance.

11 Final Hardware Implementation

11.1 Forward Converter Prototype

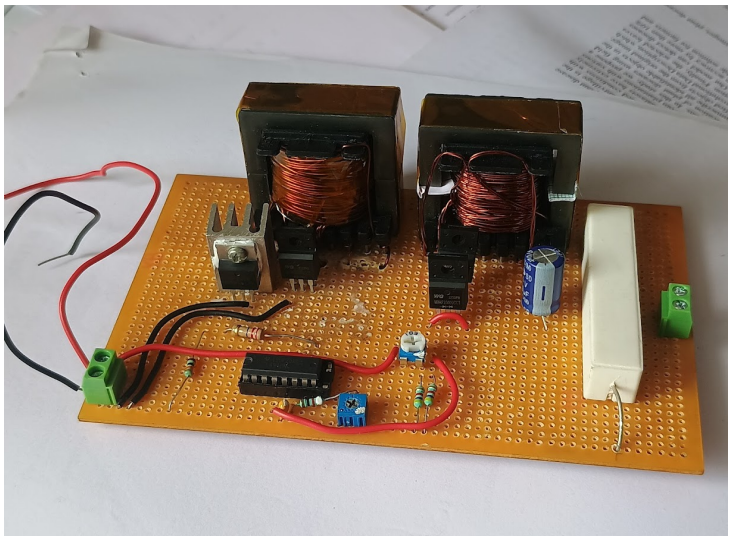

Figure 10: Front View

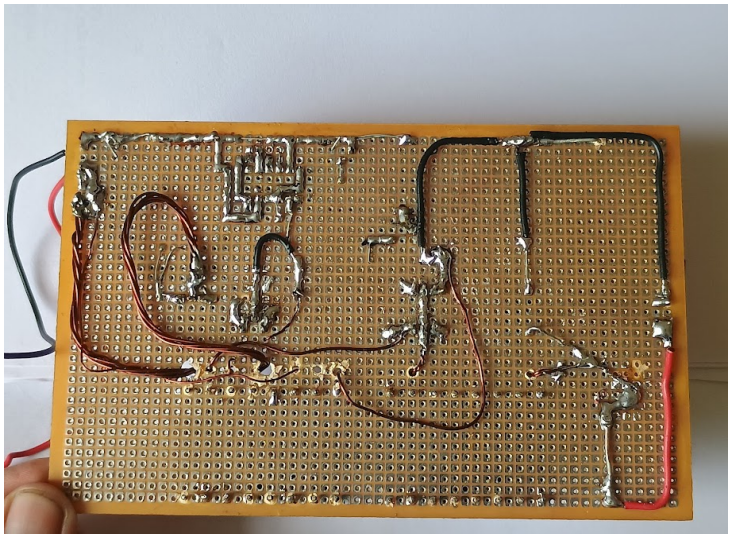

Figure 11: Back View (Solder Side)

Forward Converter Implemented on Dot Board

The forward converter was implemented on a dot board using discrete components. Care was taken to minimize wiring length and ensure proper grounding to reduce noise and switching spikes.

11.2 Input Power Measurement

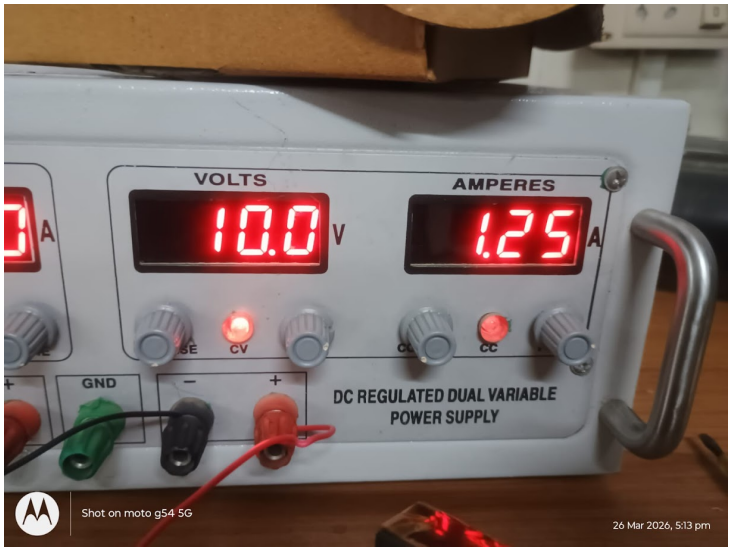

Figure 12: Input Supply Showing 10 V and 1.25 A

The converter draws approximately 1.25 A from a 10 V DC supply, corresponding to an input power of approximately 12.5 W under load conditions.

11.3 Output Voltage Verification

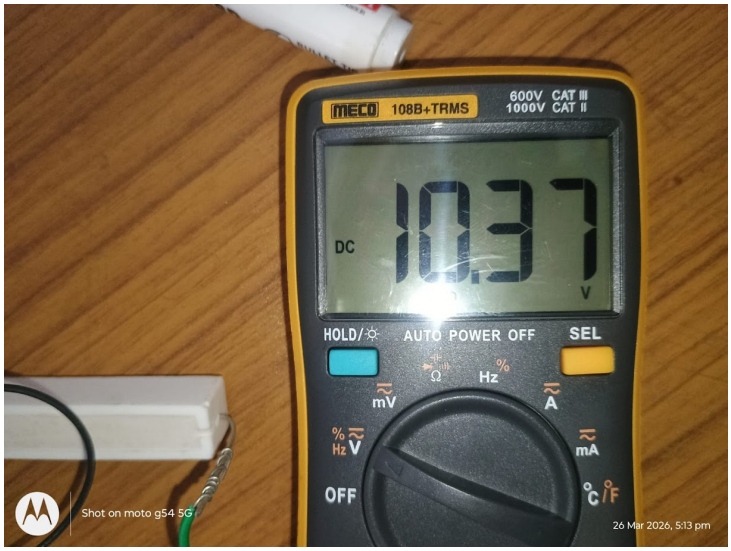

Figure 13: Measured Output Voltage Using Multimeter

The measured output voltage is less than 15v which is designed value.The change in secondary side inductance of transformer overall effected the output for duty cycle 0.38. Increasing duty cycle may increase output voltage .

11.4 Switching Waveforms

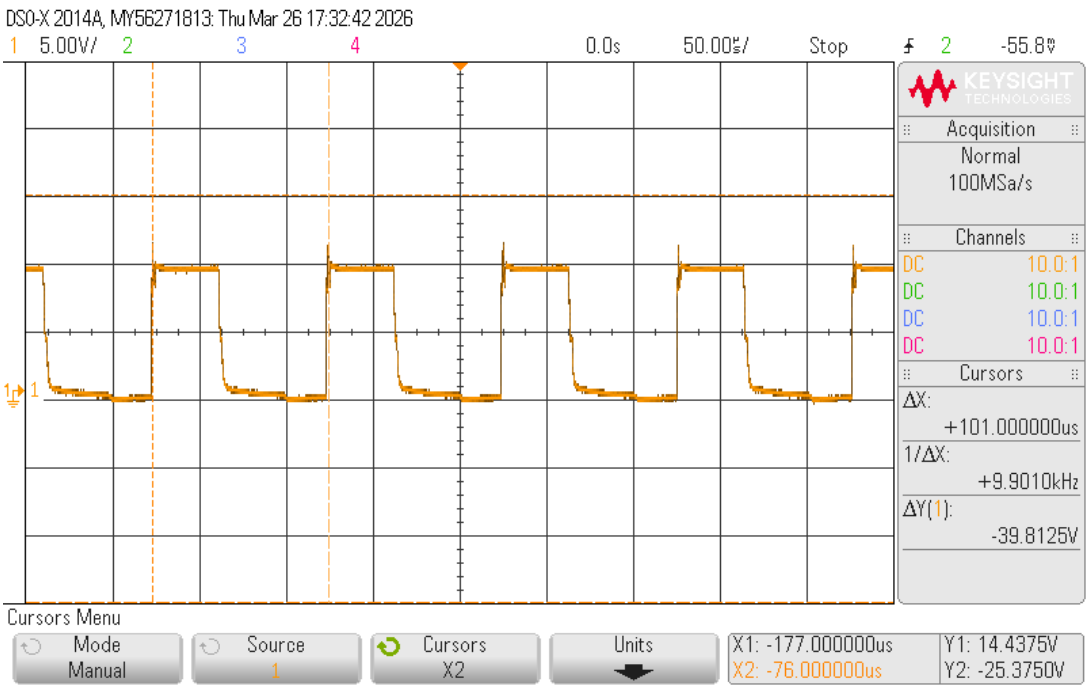

Figure 14: Switching Frequency (10 kHz)

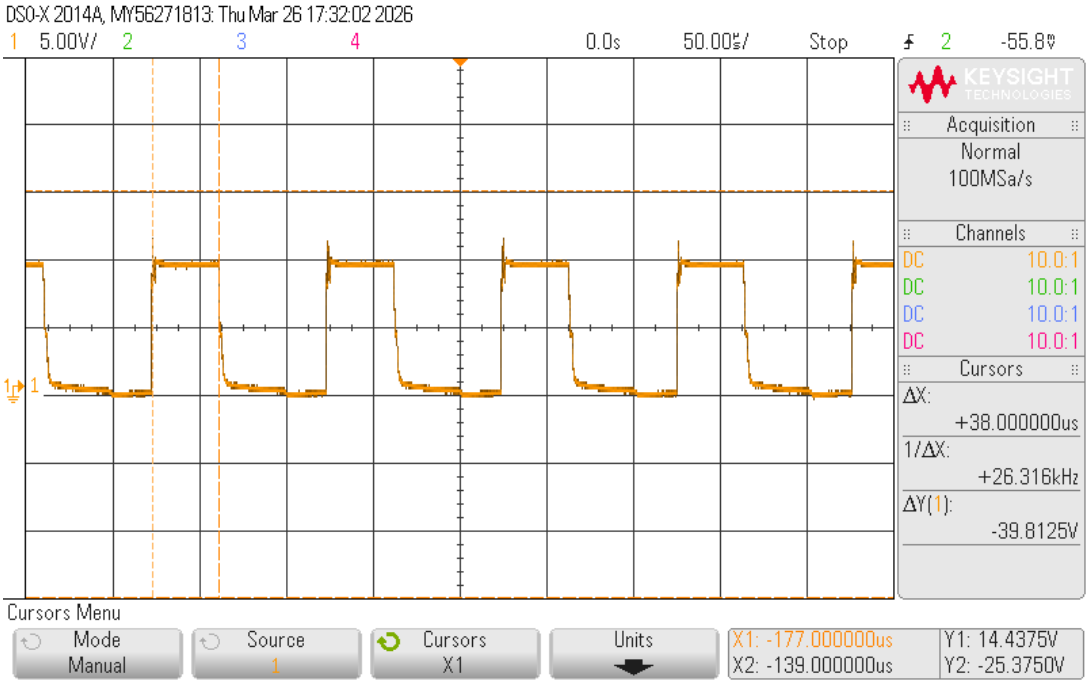

Figure 15: Duty Cycle (≈ 38%)

11.5 Transformer Voltage Waveforms

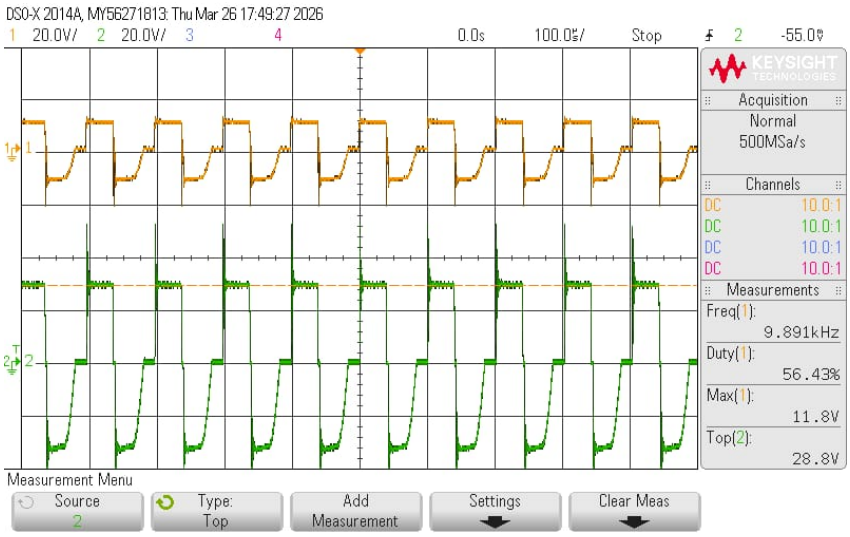

Figure 16: Primary (Orange) and Secondary (Green) Voltages

The primary side voltage of transformer is around 11.8v and secondary side voltage is 28.8v which indicates 1:3 as turns ratio.The main reason was due to secondary inductance being less than 16mH (actual value now is 9.34mH), the turns ratio become 1:3 instead of 1:4.This mainly affected effect the output voltage

11.6 LTspice Schematic (Practical Values)

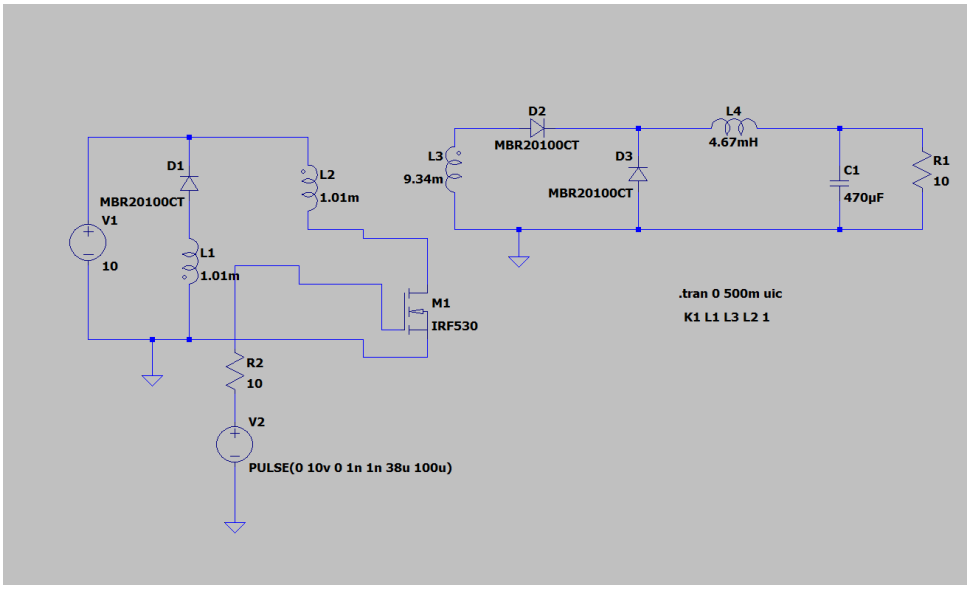

Figure 17: LTspice Circuit Using Measured Practical Values

11.7 Output Voltage (Practical Simulation)

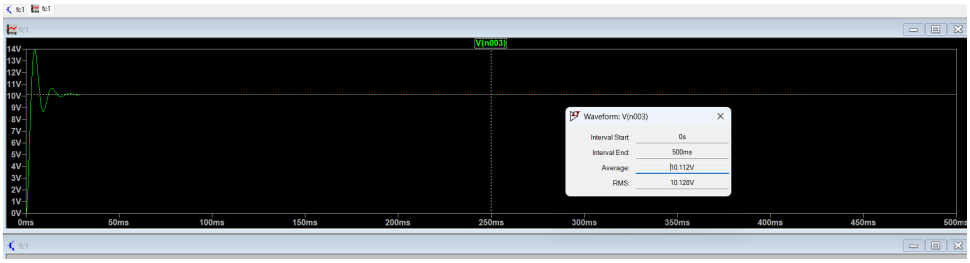

Figure 18: Simulated Output Voltage with Practical Values

Included inductance values of both the transformer and output inductor, Esr value of inductor(measured around 0.6ohms) is also added and then simulated it in Ltspice. The result (output voltage) is approximately same as practically measured value

11.8 Efficiency Calculation

The efficiency of the forward converter is calculated using the measured input and output values.

$$V_o = 10.37\text{V}, \quad R = 10, \Omega \tag{45}$$

$$P_o = \frac{V_o^2}{R} = \frac{(10.37)^2}{10} \approx 10.75\text{W} \tag{46}$$

$$P_{in} = V_{in} \times I_{in} = 10 \times 1.25 = 12.5\text{W} \tag{47}$$

$$\eta = \frac{P_o}{P_{in}} \times 100 \approx 86\% \tag{48}$$

The converter achieves an efficiency of approximately 86%, which is reasonable considering practical losses such as switching losses, diode losses, copper losses, and core losses.

12 Conclusion

A forward converter was successfully designed, simulated, and implemented. The hardware results closely match the theoretical and simulation results, validating the design methodology.

The converter operates at a switching frequency of 10 kHz with an output voltage slightly lower than the desired value. This deviation is primarily due to practical limitations in the transformer design. The reduced secondary inductance resulted in an effective turns ratio closer to 1:3 instead of the designed 1:4, which directly affected the output voltage. However, the output voltage can be increased by operating at a higher duty cycle, as the converter is designed to safely operate up to a duty cycle of 50%.

The use of a reset winding ensured proper transformer demagnetization, and the selected components provided stable and reliable performance.

The efficiency of the converter was found to be approximately 86%, which is reasonable considering practical losses such as switching losses, diode voltage drops, and parasitic effects.

Overall, the project demonstrates the practical realization of a forward converter and highlights the impact of non-idealities in real-world implementation.

13 References

1. L. Umanand, Power Electronics: Essentials and Applications, Wiley India, 2009.
2. Muhammad H. Rashid, Power Electronics: Circuits, Devices and Applications, Pearson Education, 2013.
3. Prof. L. Umanand, NPTEL Lectures on Fundamentals of Power Electronics, IISc Bangalore (week 9)